SISTEMAS DE ÁGUA GELADA

PROGRAMA BRASILEIRO DE ELIMINAÇÃO DOS HCFCs

Optimized Chiller Water Plant for Chilled Beams System

Micah Bowman → Daikin Applied Americas

Luciano de A Marcato → Daikin Applied - Brasil

24/02/2016 - Rio de Janeiro

Execução

SOMAR

Implementação

PNUD

Empoderando vidas. Fortalecendo nações.

Realização

Ministério do Meio Ambiente

GOVERNO FEDERAL BRASIL PÁTRIA EDUCADORA

Contents

- **Chilled Beam**
  - Application
  - Operation
  - Benefits
  - Design Considerations

- **Water System Design**

- **Energy Comparisons / Simulations**
  - Magnetic Bearing Centrifugal Chiller Plant
  - Premium Efficiency Air-Cooled Inverter Screw Chiller Plant

Chilled Beam Application

- The chilled beam system promotes excellent thermal comfort, energy conservation, and efficient use of space due to the high heat capacity of water used as heat transfer medium.

Heat Removal Ratio

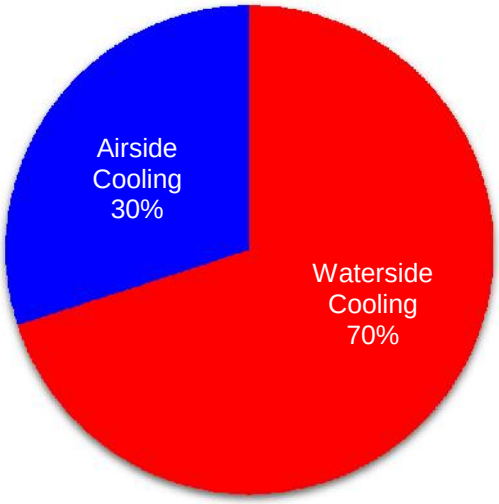

Water = Efficient Transport

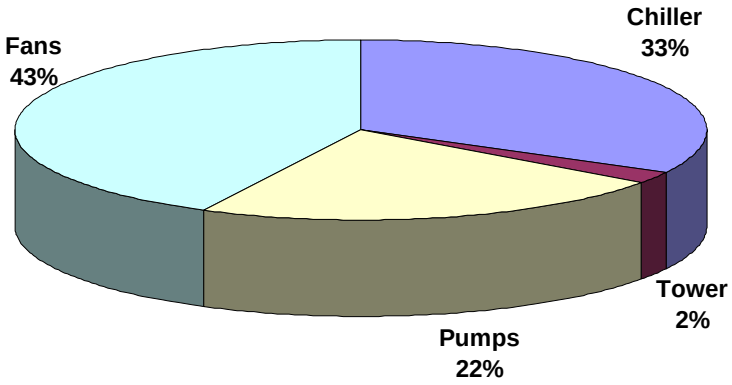

Annual Energy Usage

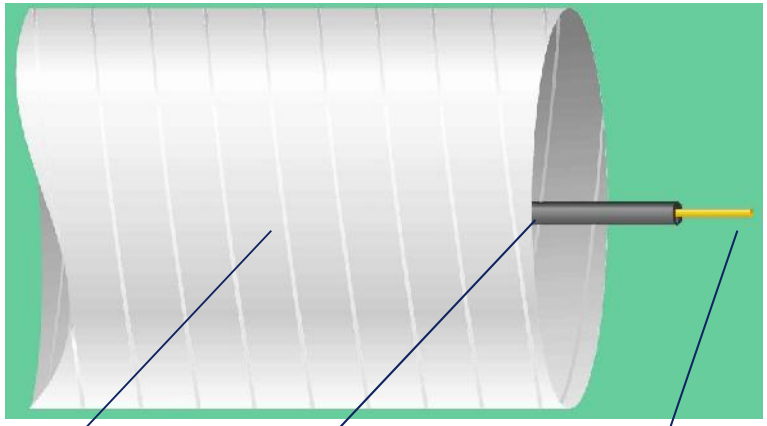

42” Duct | 2” Pipe | 5/8” Refrigerant Pipe

1 Ton of Cooling

requires between 400 and 550 CFM of air

or

4 GPM of water

All move the same amount of Energy

Fan Energy Use in Buildings

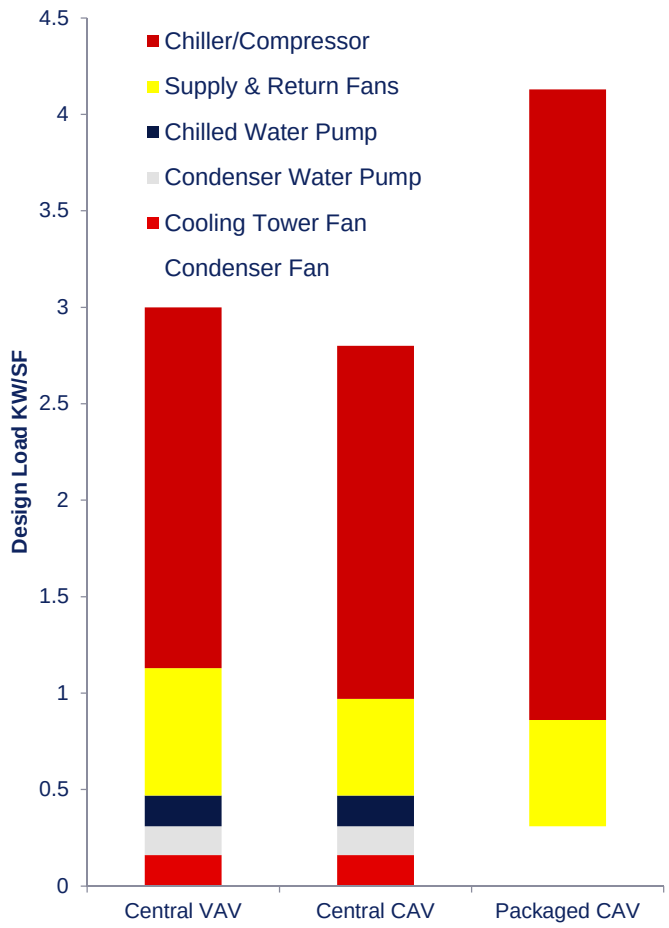

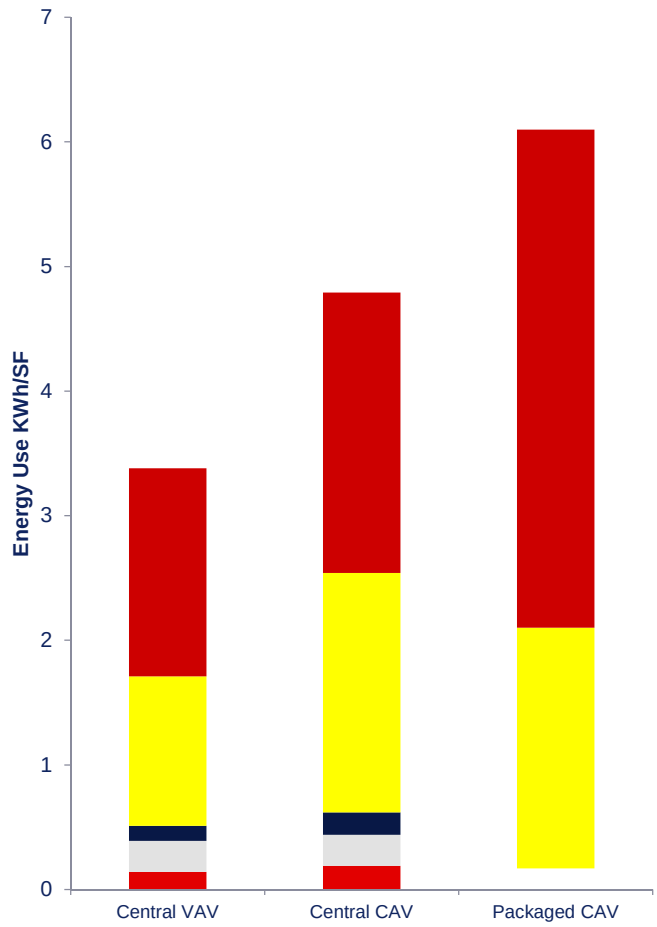

"Energy Consumption Characteristics of Commercial Building HVAC Systems" - publication prepared for U.S. Department of Energy

Chilled Beam Application

- The operation principle of the system is simple and trouble-free. The high temperature cooling and low temperature heating maximize the opportunity for free cooling and heating.

- Typical applications are cellular and open plans offices, hotel rooms, hospital wards, retail shops, etc. Laboratory applications are also good with a few extra considerations (chemicals / gases).

Chilled Beam Operation Principle

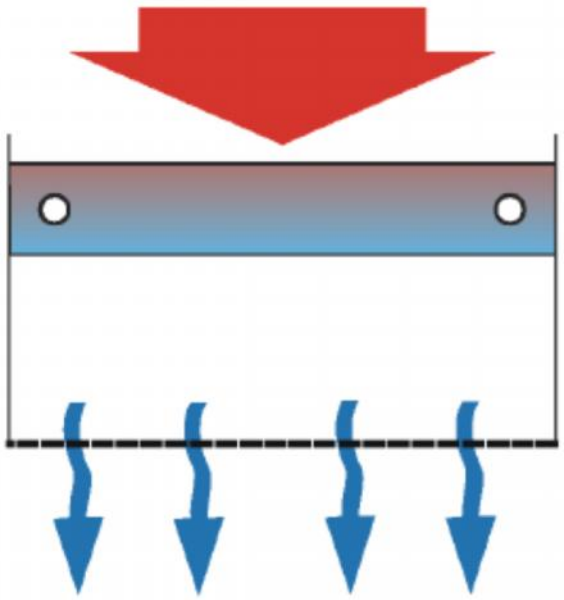

Passive Beam

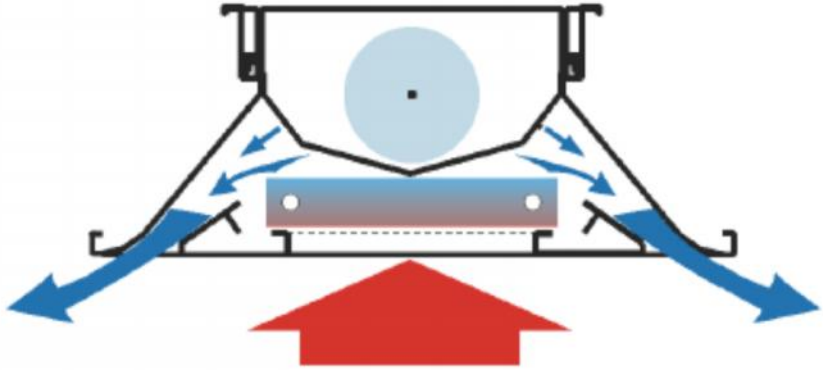

Active Beam

Chilled Beam Operation Principle

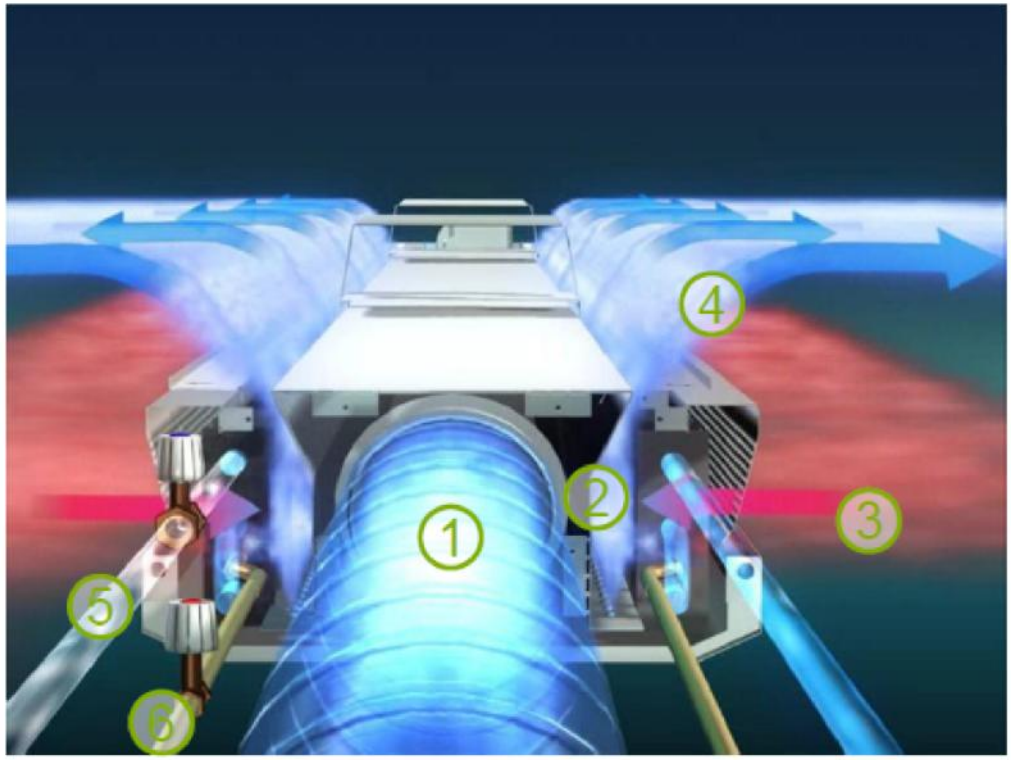

1 – Dehumidified Primary Air

2 – Primary Air supply through beam nozzles

3 – Induced room air to circulate by chilled beam heat exchanger by primary air supply air pattern

4 – Mixed air between primary and recirculate air

5 – Chilled Water connection

6 – Hot Water Connection

System Benefits

- Chilled beams provides benefits in life cycle costs:
  - Low maintenance cost (no filters, moving parts, condensate pump)
  - Easy inspection and cleaning of coils and surfaces 4-5 years
  - Easy maintenance access
  - Good energy efficiency
  - Free cooling possible in cold and temperate climate

- Chilled beams operate with a dry cooling coil
  - No condensate collection system
  - Primary air should be dehumidified in the air handling unit and/or
  - Control of water temperatures is needed to avoid condensation

ACTIVE CHILLED BEAM DESIGN CONSIDERATIONS

Characteristics that favor Active Chilled Beams

- Zones with moderate-high sensible load densities
  - Where primary airflows would be significantly higher than needed for ventilation
- Buildings most affected by space constraints
  - Hi – rises, existing buildings with induction systems
- Zones where the acoustical environment is a key design criteria
- Laboratories where sensible loads are driving airflows as opposed to air change rates
- Buildings seeking LEED or Green Globes certification

ACTIVE CHILLED BEAM DESIGN CONSIDERATIONS

Characteristics that less favor Active Chilled Beams

- Buildings with operable windows or “leaky” construction
  - Beams with drain pans could be considered
- Zones with:
  - Relatively low sensible load densities
  - Relatively low sensible heat ratios and low ventilation air requirements
  - High filtration requirements for the re-circulated room air
  - High latent loads

Primary Air Design

- Central AHU sized to handle:
  - sensible and latent cooling/heating of the ventilation air
  - portion of the sensible internal cooling/heating loads

AND

  - all of the internal and infiltration latent loads
- Primary air delivered continuously to the chilled beams
  - VAV primary air can be considered for the perimeter if the sensible loads are high
- Chilled beam water coils provide additional sensible cooling/heating to control zones

Passive Chilled Beams - *Exposed Type*

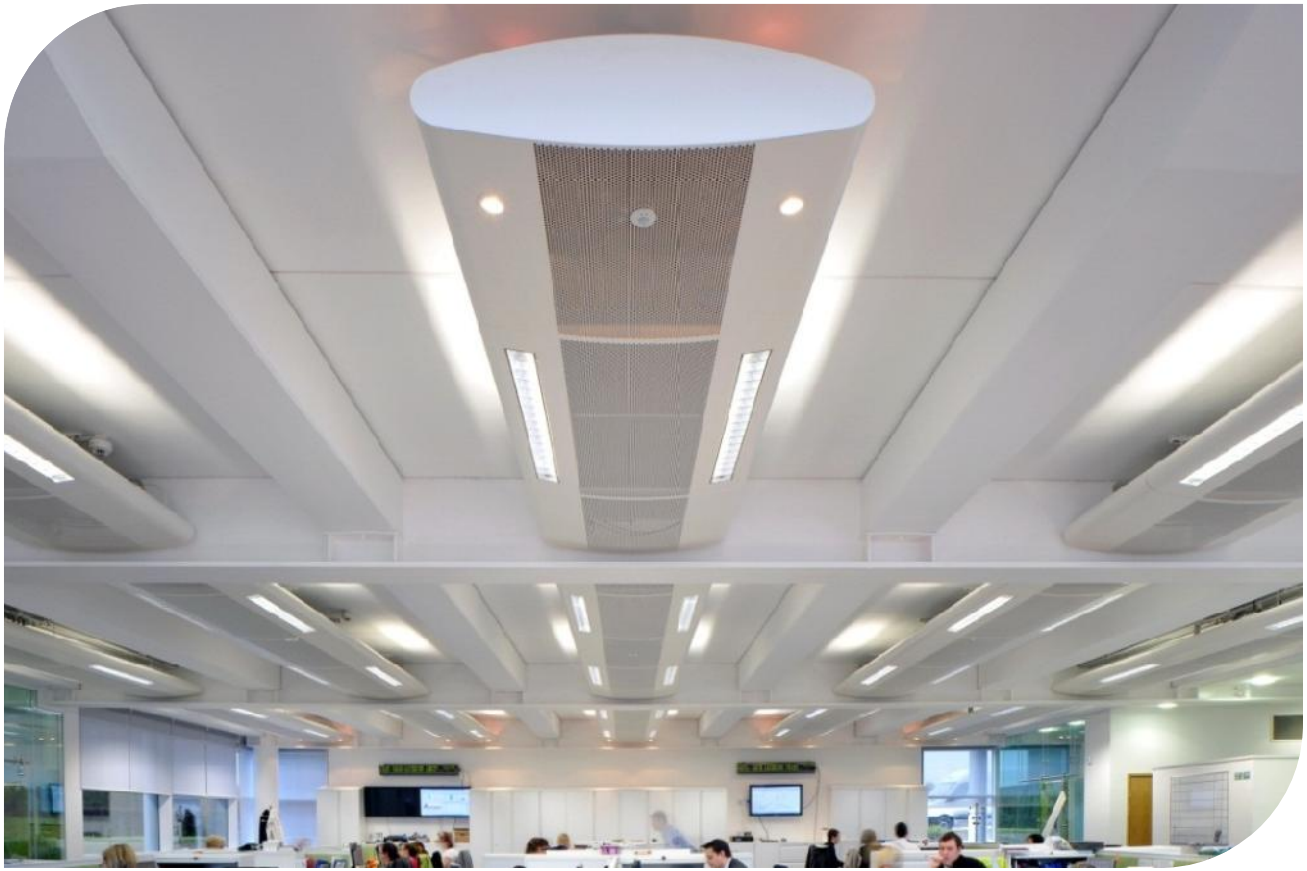

Photo Courtesy of DADANCO
A Mestek JV Company

Active Chilled Beams Typical Install

Photo Courtesy of DADANCO
A Mestek JV Company

Active Chilled Beams Typical Install

Photo Courtesy of DADANCO
A Mestek JV Company

THE LUXTON-REED CENTER

Photo Courtesy of DADANCO
A Mestek JV Company

THE LUXTON-REED CENTER

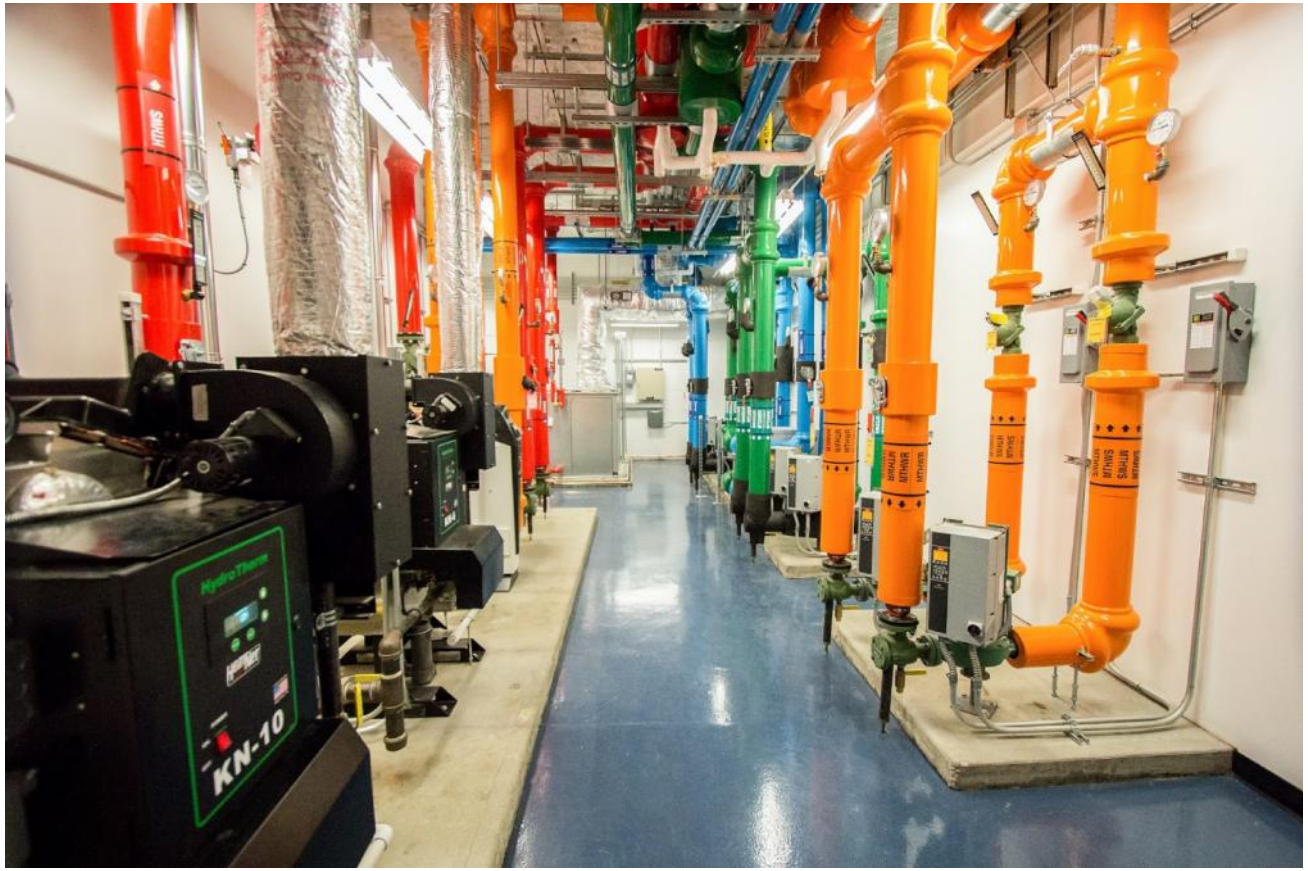

Photo Courtesy of DADANCO
A Mestek JV Company

WATER SYSTEM DESIGN

Dedicated Chiller

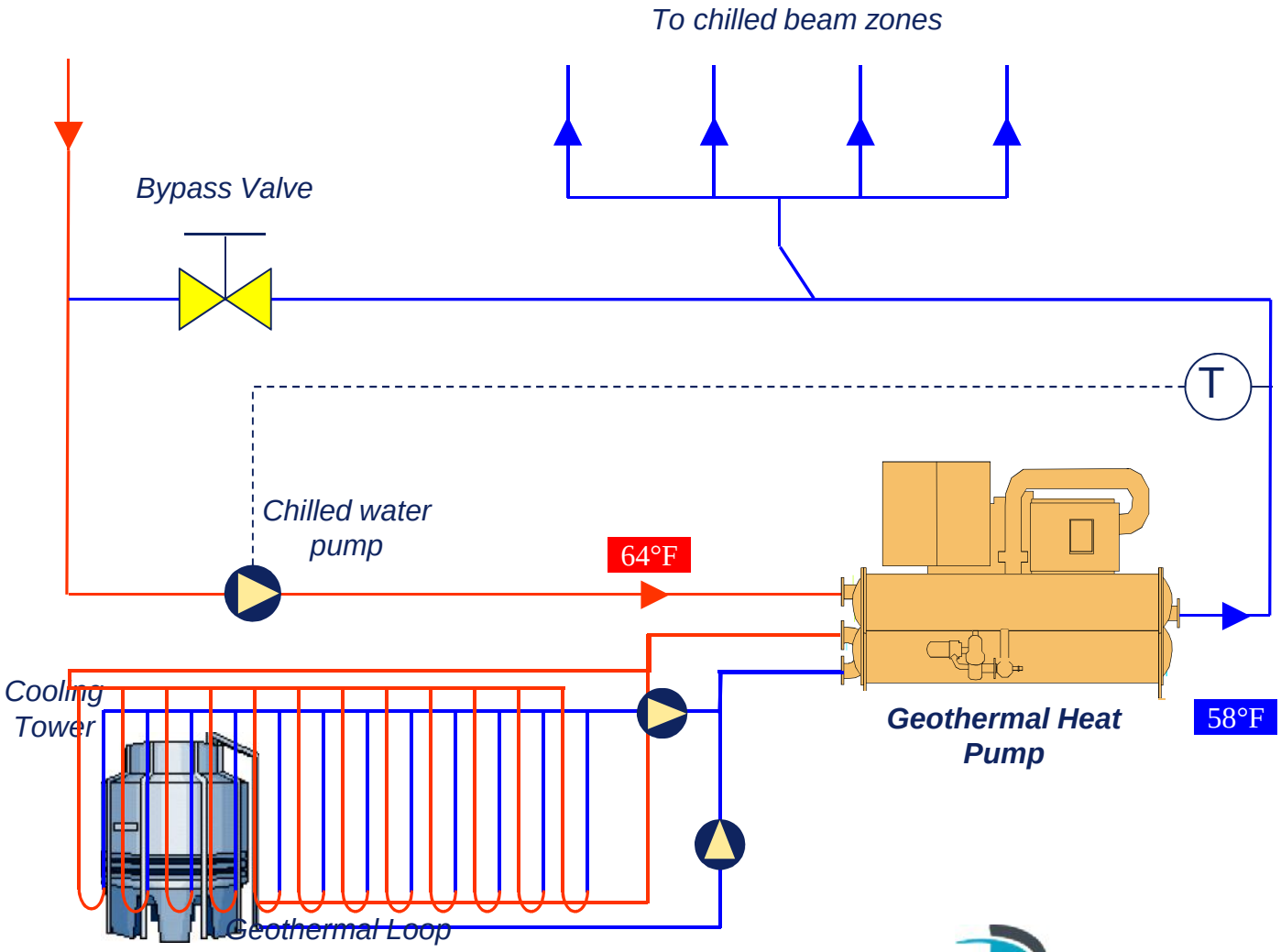

Photo Courtesy of DADANCO A Mestek JV Company

Secondary Loop

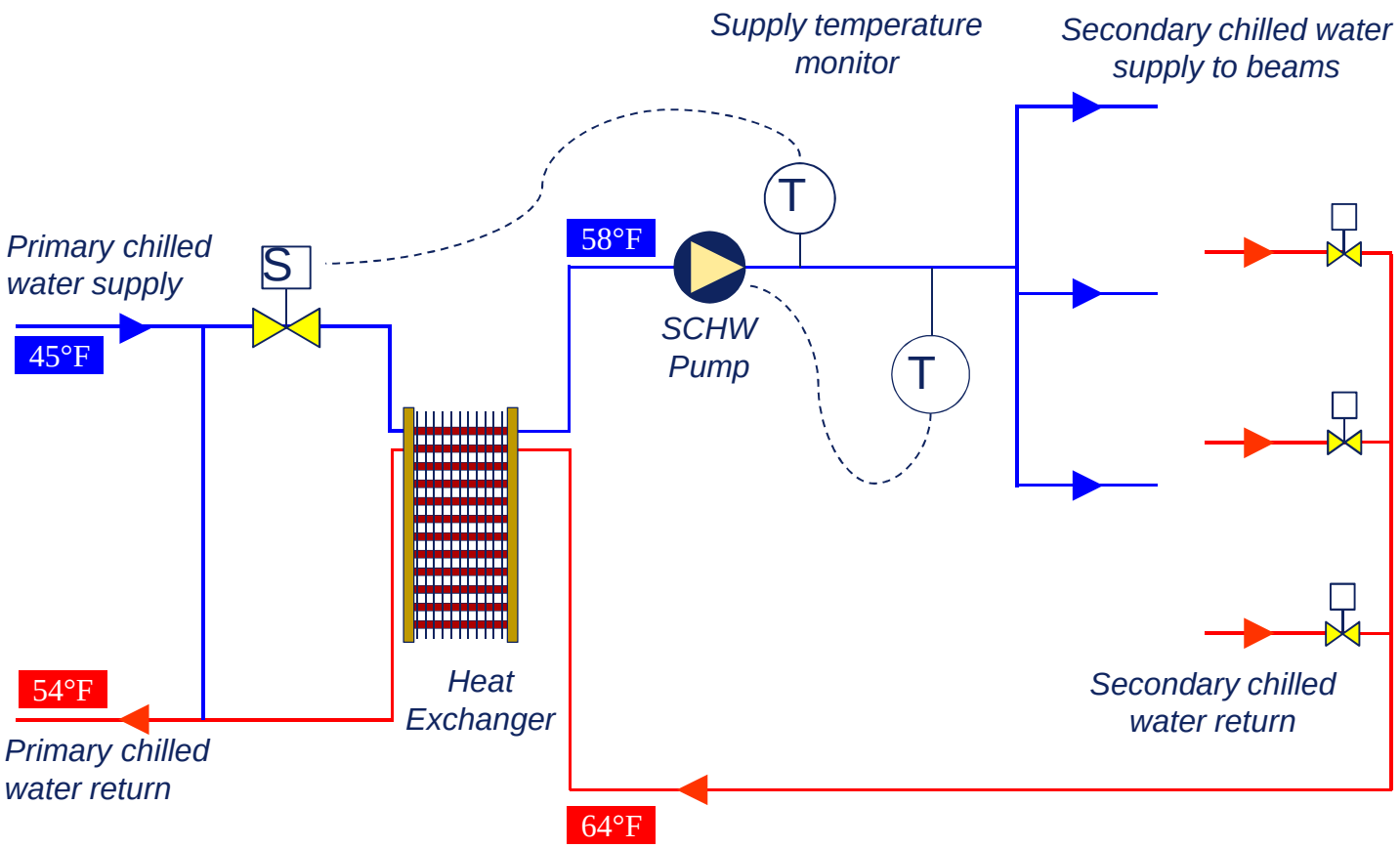

Photo Courtesy of DADANCO
A Mestek JV Company

ENERGY COMPARISON

Energy Savings - *Compared to VAV*

Source	Technology	Application	% Saving*
US Dept. of Energy Report (4/2001)	Beams/Radiant Ceilings	General	25-30
ASHRAE 2010 Technology Awards	Passive Chilled Beams	Call Center	41
ACEE Emerging Technologies Report (2009)	Active Chilled Beams	General	20
ASHRAE Journal 2007	Active Chilled Beams	Laboratory	57
SmithGroup	Active Chilled Beams	Offices	24
*Compared to VAV			

"Energy Consumption Characteristics of Commercial Building HVAC Systems" - publication prepared for U.S. Department of Energy

FAN COILS VS PASSIVE CB'S VS ACB'S

Building No.	Location	VAV Fan Coil		Passive Chilled Beams		Active Chilled Beams	
		Consumption (kWh)	Co2 Emission (kg)	Consumption (kWh)	Co2 Emission (kg)	Consumption (kWh)	Co2 Emission (kg)
1	London	198897	92203	173037	78644	163756	73828
	Birmingham	185447	84217	159717	70747	150598	66002
2	London	404008	189191	346557	159182	327919	149525
	Birmingham	375536	172884	317825	142774	299479	133244
3	London	392231	183131	338129	154846	319457	145177
	Birmingham	365010	167389	311031	139187	292599	129630
4	London	800175	377178	679824	314497	642348	295106
	Birmingham	742509	345003	621389	281945	584320	262748

Table 5. HVAC Plant Annual Consumption and CO2 Emissions

Chilled Beam System Maintenance

1 – Air Side Maintenance
Chilled Beams / Primary Air AHU / AHU or FCU if applied
2 – Chiller Plant
3 – Water Distribution System
4 – Control System

Fan coil in 300 rooms, 20-year life cycle:

Filter change:	€25/filter twice a year	€ 300.000
	15 min to replace @ €20/hr	€ 60.000
Cleaning of condensation system: 3 times/year @ 15 min		€ 90.000
Motor replacement:	€200/motor	€ 60.000
	2 h work @ €20/hr	€ 12.000
Fan coil replacement:	€ 1000/ unit	€ 150.000
Total		**€ 672.000**

Chilled beam in 300 rooms, 20-year life cycle:

Cleaning of chilled beam:		
	once in every 5 years á 15 min @ €20/hr	€ 6.000

Difference in maintenance and replacement costs **€ 666.000**

Energy Analyzer 2 Simulation

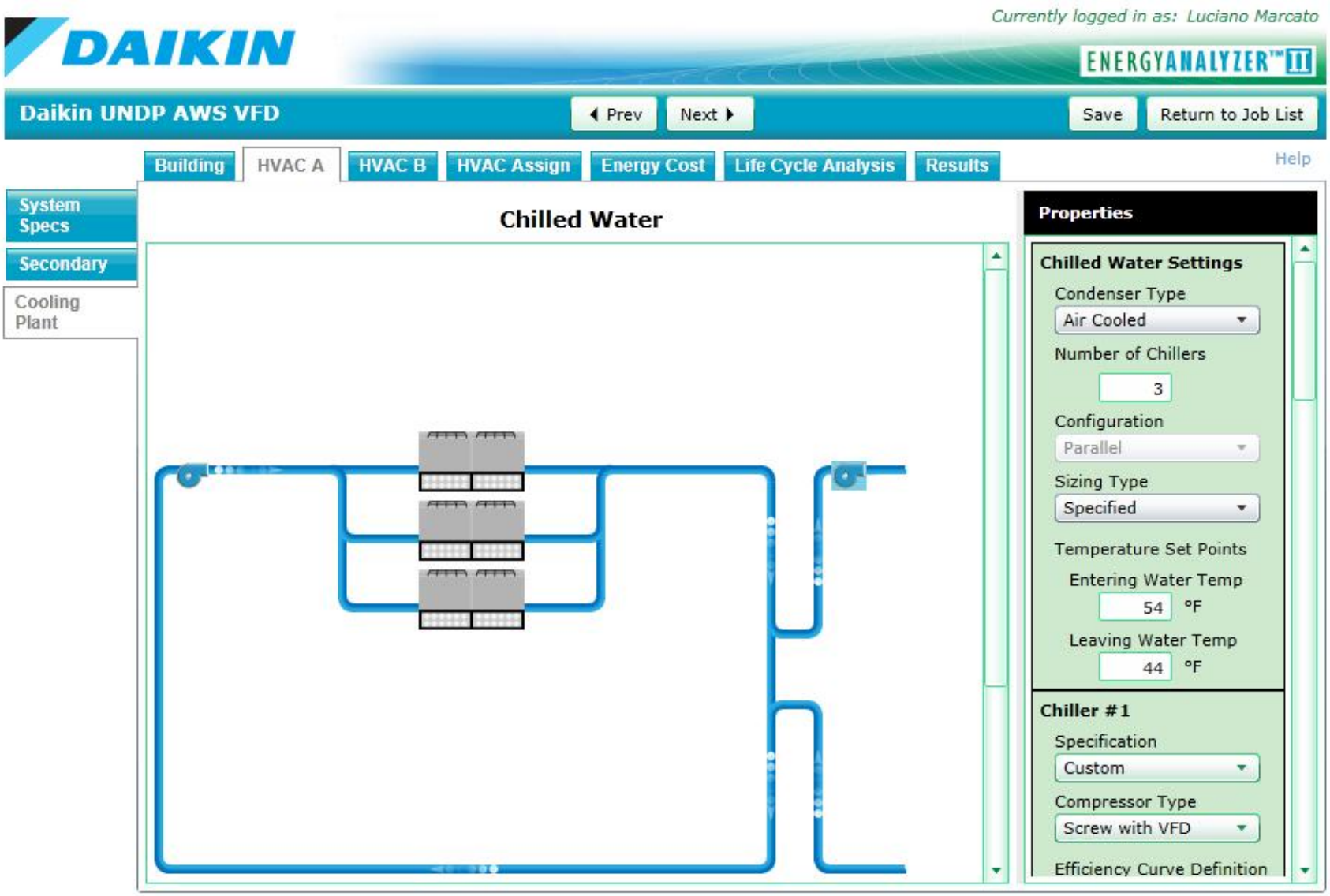

Energy Analyzer 2 Simulation

910 TR system configured with N+1

Three levels of temperatures.

Low Temp	5°C	DOAS	≈30% (280TR)
Medium Temp	10°C	AHUs	≈30% (280TR)
High Temp	15°C	Chilled Beams	≈40% (350TR)

Qty 4 x 300T Premium Efficiency VFD Air-Cooled Screw Chillers

Qty 2 x 330T Premium Efficiency
Air-Cooled Screw Chillers

Qty 2 x 290T Premium Efficiency
Air-Cooled Screw Chillers

*one sized as the +1 “joker” chiller

10% Chiller Cost Savings

Chilled Water Temp → simulation

HVAC A		HVAC B	
Specification	Custom	Specification	Custom
Compressor Type	Screw with VFD	Compressor Type	Screw with VFD
Efficiency Curve Definition	AHRI	Efficiency Curve Definition	AHRI
Eff. @ 100% Load	1.14 KW/ton	Eff. @ 100% Load	0.98 KW/ton
Eff. @ 75% Load	0.93 KW/ton	Eff. @ 75% Load	0.78 KW/ton
Eff. @ 50% Load	0.92 KW/ton	Eff. @ 50% Load	0.75 KW/ton
Eff. @ 25% Load	0.89 KW/ton	Eff. @ 25% Load	0.72 KW/ton
Chiller capacity	300 tons	Chiller capacity	350 tons
Chiller #2		**Chiller #2**	
Specification	Custom	Specification	Custom
Compressor Type	Screw with VFD	Compressor Type	Screw with VFD
Efficiency Curve Definition	AHRI	Efficiency Curve Definition	AHRI
Eff. @ 100% Load	1.14 KW/ton	Eff. @ 100% Load	1.06 KW/ton
Eff. @ 75% Load	0.93 KW/ton	Eff. @ 75% Load	0.86 KW/ton
Eff. @ 50% Load	0.92 KW/ton	Eff. @ 50% Load	0.84 KW/ton
Eff. @ 25% Load	0.89 KW/ton	Eff. @ 25% Load	0.81 KW/ton
Chiller capacity	300 tons	Chiller capacity	280 tons

Chilled Water Temp → simulation

Chiller #3		**Chiller #3**	
Specification	Custom	Specification	Custom
Compressor Type	Screw with VFD	Compressor Type	Screw with VFD
Efficiency Curve Definition	AHRI	Efficiency Curve Definition	AHRI
Eff. @ 100% Load	1.14 KW/ton	Eff. @ 100% Load	1.22 KW/ton
Eff. @ 75% Load	0.93 KW/ton	Eff. @ 75% Load	0.99 KW/ton
Eff. @ 50% Load	0.92 KW/ton	Eff. @ 50% Load	0.96 KW/ton
Eff. @ 25% Load	0.89 KW/ton	Eff. @ 25% Load	0.94 KW/ton
Chiller capacity	300 tons	Chiller capacity	280 tons
Primary Chilled Water Loop		**Primary Chilled Water Loop**	
Flow Control (VFD)	No	Flow Control (VFD)	No
Motor Efficiency	Standard	Motor Efficiency	Standard
Secondary Chilled Water Loop		**Secondary Chilled Water Loop**	
Flow Control (VFD)	Yes	Flow Control (VFD)	Yes
Minimum Flow Setting	25 %	Minimum Flow Setting	25 %
Motor Efficiency	Standard	Motor Efficiency	Standard
Heating Plant	No Central Plant	**Heating Plant**	No Central Plant

Chilled Water Temp → simulation

Monthly Energy Usage by Equipment

	Heating Equipment (kWh)			Cooling Equipment (kWh)		
Month	HVAC A	HVAC B	% Change	HVAC A	HVAC B	% Change
Jan	n/a	n/a	n/a	211,990	192,331	0.09%
Feb	n/a	n/a	n/a	186,982	169,118	0.10%
Mar	n/a	n/a	n/a	193,319	174,527	0.10%
Apr	n/a	n/a	n/a	153,271	136,981	0.11%
May	n/a	n/a	n/a	100,894	88,573	0.12%
Jun	n/a	n/a	n/a	55,948	47,190	0.16%
Jul	n/a	n/a	n/a	52,792	45,214	0.14%
Aug	n/a	n/a	n/a	83,310	71,694	0.14%
Sep	n/a	n/a	n/a	67,316	58,133	0.14%
Oct	n/a	n/a	n/a	112,573	98,530	0.12%
Nov	n/a	n/a	n/a	137,465	122,352	0.11%
Dec	n/a	n/a	n/a	182,712	164,276	0.10%
Totals	n/a	n/a	n/a	1,538,573	1,368,920	0.11%

11% Chiller Energy Usage Improvement

Life Cycle Analysis

	HVAC A	HVAC B
Capital Cost	$5,000,000	$4,500,000
Expected Rebate	$0	$0
Maintenance Cost	$200,000	$200,000
Capital Cost After Rebate	$5,000,000	$4,500,000
Salvage Value	$500,000	$450,000

Economic Summary

	HVAC A	HVAC B	Difference
Total Capital Cost	$5,000,000	$4,500,000	$500,000
Utility Cost First Year	$1,190,949	$1,146,398	$44,551
Maintenance Cost First Year	$200,000	$200,000	$0
Total Utility Cost for Life Cycle	$116,083,882	$111,702,379	$4,381,503
Total Maintenance Cost for Life Cycle	$10,972,902	$10,972,902	$0
Total Life Cycle Cost	$130,481,784	$125,757,781	$4,724,003
Simple Payback			-11.2 years
New Present Value			$828,883
Interest Rate of Return (IRR)			n/a

Life Cycle Analysis

Economic Summary

	HVAC A	HVAC B	Difference
Total Capital Cost	$5,000,000	$4,500,000	$500,000
Utility Cost First Year	$1,190,949	$1,146,398	$44,551
Maintenance Cost First Year	$200,000	$200,000	$0
Total Utility Cost for Life Cycle	$116,083,882	$111,702,379	$4,381,503
Total Maintenance Cost for Life Cycle	$10,972,902	$10,972,902	$0
Total Life Cycle Cost	$130,481,784	$125,757,781	$4,724,003
Simple Payback			-11.2 years
New Present Value			$828,883
Interest Rate of Return (IRR)			n/a

Considered Chillers only

Life Cycle Analysis

Economic Summary

	HVAC A	HVAC B	Difference
Total Capital Cost	$10,000,000	$12,500,000	($2,500,000)
Utility Cost First Year	$1,190,949	$1,146,398	$44,551
Maintenance Cost First Year	$300,000	$150,000	$150,000
Total Utility Cost for Life Cycle	$116,083,882	$111,702,379	$4,381,503
Total Maintenance Cost for Life Cycle	$16,459,354	$8,229,677	$8,229,677
Total Life Cycle Cost	$139,393,236	$128,494,556	$10,898,680
Simple Payback			12.9 years
New Present Value			($751,703)
Interest Rate of Return (IRR)			14.69 %

Chillers + Airside + Water Distribution Systems

Energy Analyzer 2 Simulation

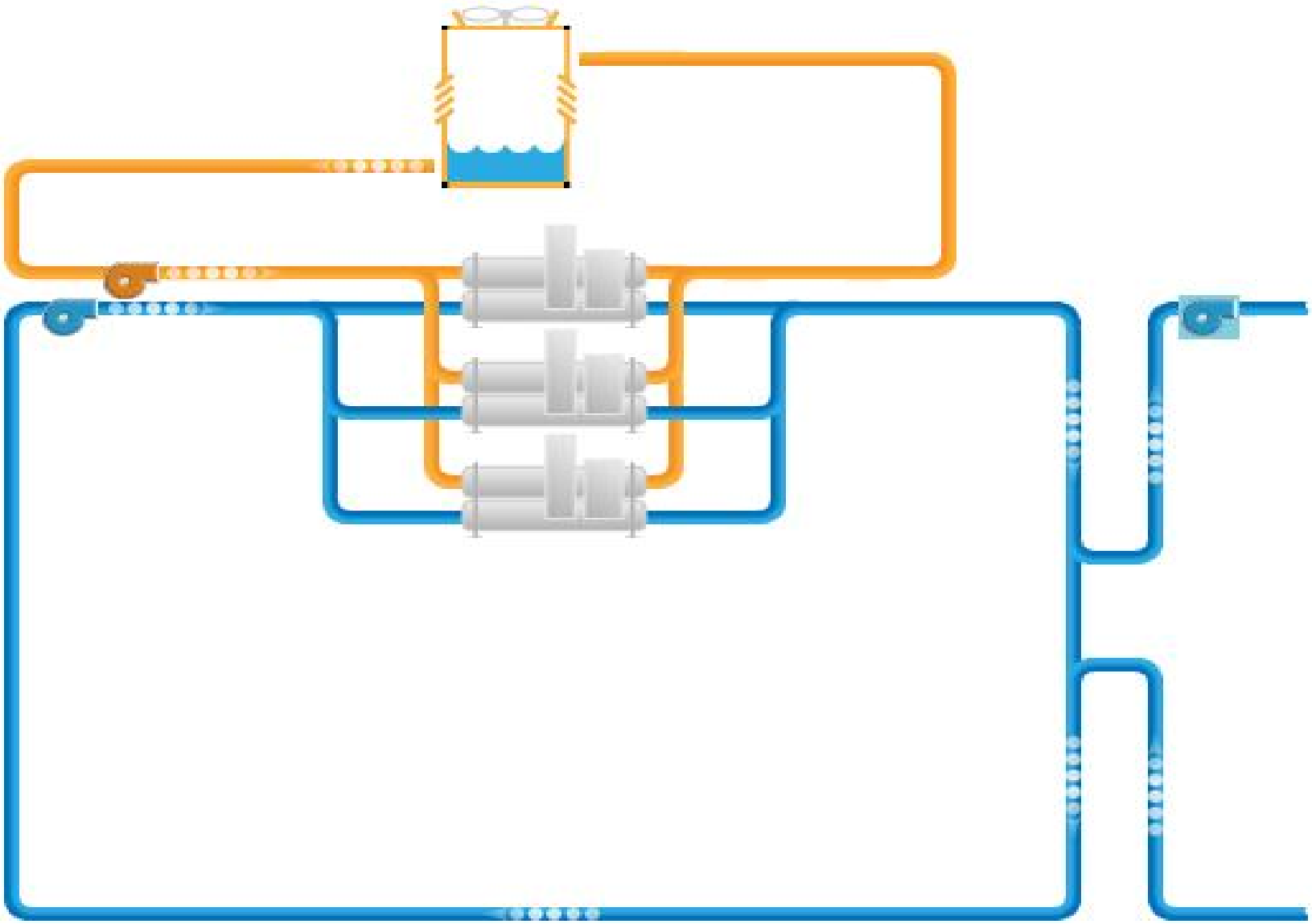

Energy Analyzer 2 Simulation

910 TR system configured with N+1

Three levels of temperatures.

Low Temp	5°C	DOAS	≈30% (280TR)
Medium Temp	10°C	AHUs	≈30% (280TR)
High Temp	15°C	Chilled Beams	≈40% (350TR)

Energy Analyzer 2 Simulation

Qty 4 x Identical Magnetic Bearing Chillers to handle all temperature conditions.

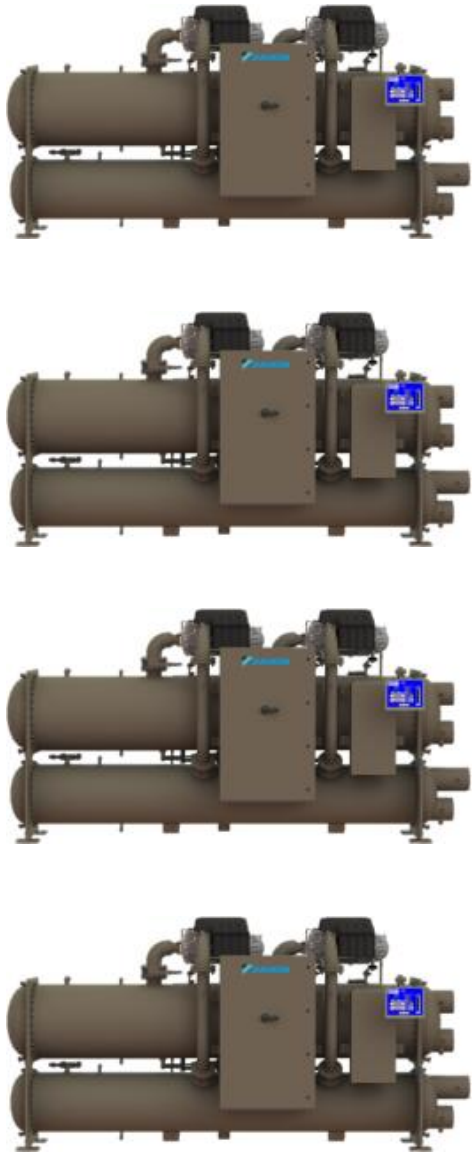

Energy Analyzer 2 Simulation

Qty 2 x Magnetic Bearing Chillers for DOAS and AHUs

Qty 2 x Magnetic Bearing Chillers of smaller size for AHUs and Chilled Beams

*one sized as the +1 “joker” chiller

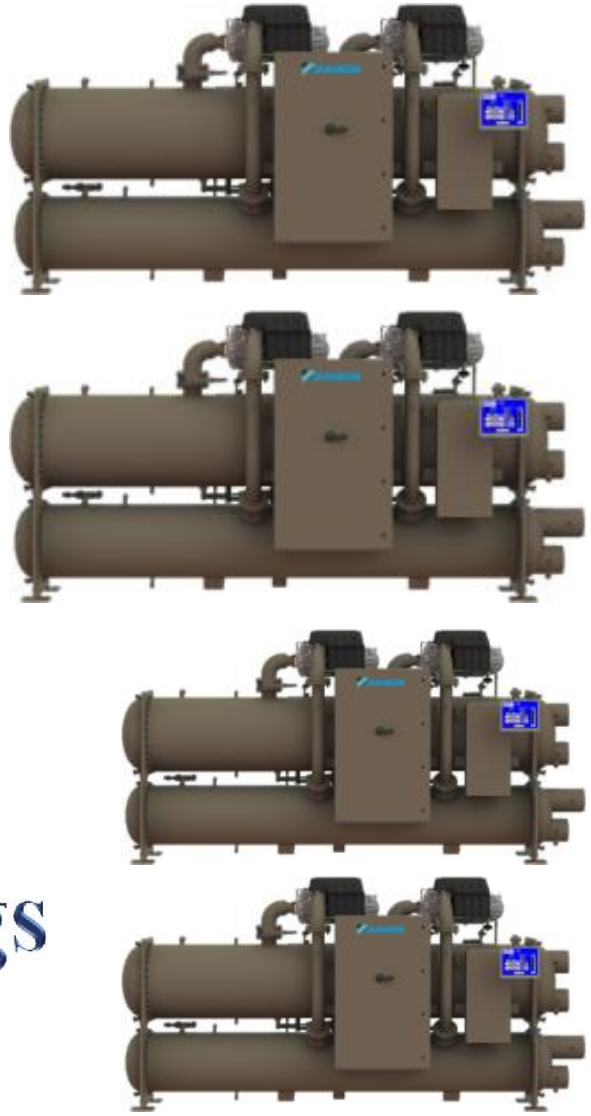

25% Chiller Cost Savings

Chilled Water Temp → simulation

HVAC A		HVAC B	
Specification	Custom	Specification	Custom
Compressor Type	Magnetic Bearing	Compressor Type	Magnetic Bearing
Efficiency Curve Definition	AHRI	Efficiency Curve Definition	AHRI
Eff. @ 100% Load	0.57 KW/ton	Eff. @ 100% Load	0.38 KW/ton
Eff. @ 75% Load	0.56 KW/ton	Eff. @ 75% Load	0.36 KW/ton
Eff. @ 50% Load	0.52 KW/ton	Eff. @ 50% Load	0.34 KW/ton
Eff. @ 25% Load	0.52 KW/ton	Eff. @ 25% Load	0.32 KW/ton
Chiller capacity	300 tons	Chiller capacity	350 tons
Chiller #2		**Chiller #2**	
Specification	Custom	Specification	Custom
Compressor Type	Magnetic Bearing	Compressor Type	Magnetic Bearing
Efficiency Curve Definition	AHRI	Efficiency Curve Definition	AHRI
Eff. @ 100% Load	0.57 KW/ton	Eff. @ 100% Load	0.54 KW/ton
Eff. @ 75% Load	0.56 KW/ton	Eff. @ 75% Load	0.46 KW/ton
Eff. @ 50% Load	0.52 KW/ton	Eff. @ 50% Load	0.43 KW/ton
Eff. @ 25% Load	0.53 KW/ton	Eff. @ 25% Load	0.42 KW/ton
Chiller capacity	300 tons	Chiller capacity	280 tons

Chilled Water Temp → simulation

Chiller #3		Chiller #3	
Specification	Custom	Specification	Custom
Compressor Type	Magnetic Bearing	Compressor Type	Magnetic Bearing
Efficiency Curve Definition	AHRI	Efficiency Curve Definition	AHRI
Eff. @ 100% Load	0.57 KW/ton	Eff. @ 100% Load	0.61 KW/ton
Eff. @ 75% Load	0.56 KW/ton	Eff. @ 75% Load	0.61 KW/ton
Eff. @ 50% Load	0.52 KW/ton	Eff. @ 50% Load	0.56 KW/ton
Eff. @ 25% Load	0.53 KW/ton	Eff. @ 25% Load	0.59 KW/ton
Chiller capacity	300 tons	Chiller capacity	280 tons

Chilled Water Temp → simulation

Monthly Energy Usage by Equipment

	Heating Equipment (kWh)			Cooling Equipment (kWh)		
Month	HVAC A	HVAC B	% Change	HVAC A	HVAC B	% Change
Jan	n/a	n/a	n/a	98,517	78,213	0.21%
Feb	n/a	n/a	n/a	85,995	67,853	0.21%
Mar	n/a	n/a	n/a	90,407	71,111	0.21%
Apr	n/a	n/a	n/a	67,052	50,915	0.24%
May	n/a	n/a	n/a	40,470	29,612	0.27%
Jun	n/a	n/a	n/a	20,189	13,695	0.32%
Jul	n/a	n/a	n/a	19,229	13,268	0.31%
Aug	n/a	n/a	n/a	30,955	21,693	0.30%
Sep	n/a	n/a	n/a	25,713	18,182	0.29%
Oct	n/a	n/a	n/a	44,964	32,849	0.27%
Nov	n/a	n/a	n/a	58,974	44,455	0.25%
Dec	n/a	n/a	n/a	82,120	63,905	0.22%
Totals	n/a	n/a	n/a	664,585	505,750	0.24%

24% Chiller Energy Usage Improvement

Life Cycle Analysis

Life Cycle Length	25 years
Tax Rate	35.00 %
Interest Rate	20.00 %
Depreciation Life	10 years
Depreciation Method	Straight line
Inflation Rate Maintenance	6.00 %
Inflation Rate Electricity	10.00 %
Inflation Rate Natural Gas	5.00 %
Inflation Rate Water	10.00 %

	HVAC A	HVAC B
Capital Cost	$4,000,000	$3,600,000
Expected Rebate	$0	$0
Maintenance Cost	$150,000	$150,000
Capital Cost After Rebate	$4,000,000	$3,600,000
Salvage Value	$400,000	$360,000

Life Cycle Analysis

Economic Summary

	HVAC A	HVAC B	Difference
Total Capital Cost	$4,000,000	$3,600,000	$400,000
Utility Cost First Year	$1,114,795	$1,069,545	$45,250
Maintenance Cost First Year	$150,000	$150,000	$0
Total Utility Cost for Life Cycle	$108,594,394	$104,144,183	$4,450,211
Total Maintenance Cost for Life Cycle	$8,229,677	$8,229,677	$0
Total Life Cycle Cost	$119,564,071	$114,839,860	$4,724,211
Simple Payback			-8.8 years
New Present Value			$748,282
Interest Rate of Return (IRR)			n/a

Considered Chillers only

Life Cycle Analysis

Economic Summary

	HVAC A	HVAC B	Difference
Total Capital Cost	$8,000,000	$10,000,000	($2,000,000)
Utility Cost First Year	$1,114,795	$1,069,545	$45,250
Maintenance Cost First Year	$400,000	$200,000	$200,000
Total Utility Cost for Life Cycle	$108,594,394	$104,144,183	$4,450,211
Total Maintenance Cost for Life Cycle	$21,945,805	$10,972,902	$10,972,902
Total Life Cycle Cost	$136,020,199	$121,967,085	$14,053,114
Simple Payback			8.2 years
New Present Value			$29,533
Interest Rate of Return (IRR)			20.24 %

Chillers + Air side + water distribution systems

Active Chilled Beams - *First Costs*

- **Office Building, Palo Alto, CA**
- **80,000 ft^2**
- **Thermostat in each office for beam design**

*"costs were in line with VAV"**

**HPAC Engineering Article "European Technology Taking Hold in the U.S.: Chilled Beams, Peter Rumsey, PE, CEM, FASHRAE, FRMI*

Active Chilled Beams - *First Costs*

- **Office Building, Denver, CO**
- **600,000 ft^2 design/build renovation**
- **Elimination of two air handlers per floor due to beams**

*"the chilled-beam system was equal to the VAV system"**

**HPAC Engineering Article "European Technology Taking Hold in the U.S.: Chilled Beams, Peter Rumsey, PE, CEM, FASHRAE, FRMI, January 1st 2010*

System Benefits

- **Lower energy consumption and operating costs as primary air flow is reduced (by 25-50%)**
- **Excellent thermal comfort and better IAQ (no dumping in cooling or stratification in heating mode)**
- **Very low noise levels with typical inlet static pressures of 0.2 in. w.c and there are no fans or motors located in/near the occupied spaces**
- **Space savings in ceiling plenums and vertical shafts due to drastically reduced ductwork sizes**
- **Eliminate Fan Powered VAV (no power or maintenance)**
- **ALWAYS LOOK AS A SYSTEM !**
- **ALWAYS LOOK FOR LIFE CYCLE COST EVALUATION !**

SISTEMAS DE ÁGUA GELADA

PROGRAMA BRASILEIRO DE ELIMINAÇÃO DOS HCFCs
Projeto para o Gerenciamento de Chillers

Apoio Institucional:

ASHRAE Brasil Chapter

ABRAVA
ASSOCIAÇÃO BRASILEIRA DE REFRIGERAÇÃO, AR CONDICIONADO, VENTILAÇÃO E AQUECIMENTO

ABESCO
Associação Brasileira das Empresas de Serviços de Conservação de Energia

ABRAFAC
ASSOCIAÇÃO BRASILEIRA DE *FACILITIES*

ANPRAC
Associação Nacional dos Profissionais de Refrigeração, Ar Condicionado, Ventilação e Aquecimento

ASBRAV
Associação Sul Brasileira de Refrigeração, Ar Condicionado, Aquecimento e Ventilação

GREEN BUILDING COUNCIL BRASIL
GBC BRASIL

BCxA Building Commissioning Association
BRASIL CHAPTER

SINDRATAR-RJ

Execução

SOMAR

Implementação

PNUD
Empoderando vidas. Fortalecendo nações.

Realização

Ministério do Meio Ambiente

GOVERNO FEDERAL
BRASIL
PÁTRIA EDUCADORA